M5N

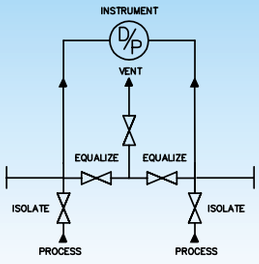

instrument manifold (direct)

specifications

Five valve manifold model M5N to accomodate any half DIN 19213 interface compliant pressure transmitter.

body	stainless steel
inlet (2x)	½" npt female at front side
outlet (2x)	flanged at back side DIN 19213
vent/test connection	at front side
equalizing bonnet (2x)	at top side
isolating bonnet (2x)	at left and right hand side
venting bonnet	at top side
stem	type HS, conical metal end tip with PTFE gland packing
pressure in bar	420

options:	stem type SO (max. pressure 400 bar) high temperature up to 550 °C high pressure up to 700 bar anti tamper facility with removable T-bar key

Detailed drawing available on request.

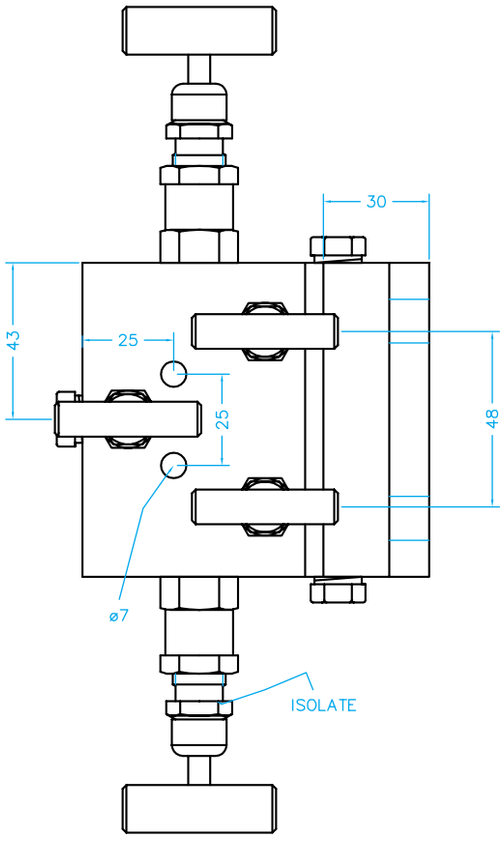

top view

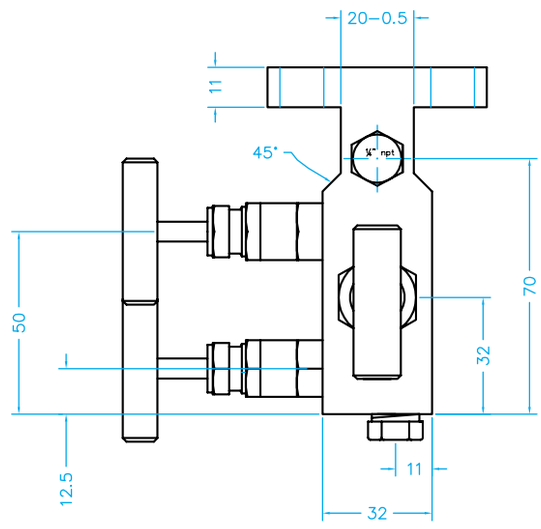

side view

type	in x out	thread type	body	stem	packing
M5N	¼" x flanged ⅜" x flanged ½" x flanged	npt bsp	Carbon steel AISI 304 AISI 316 AISI 316L Monel Hastelloy C	HS SO	PTFE glass filled PTFE grafoil

extra to order: mounting pack 7/16" UNF bolts and PTFE gaskets